This is not a chip, it is the connector to the Z88 card

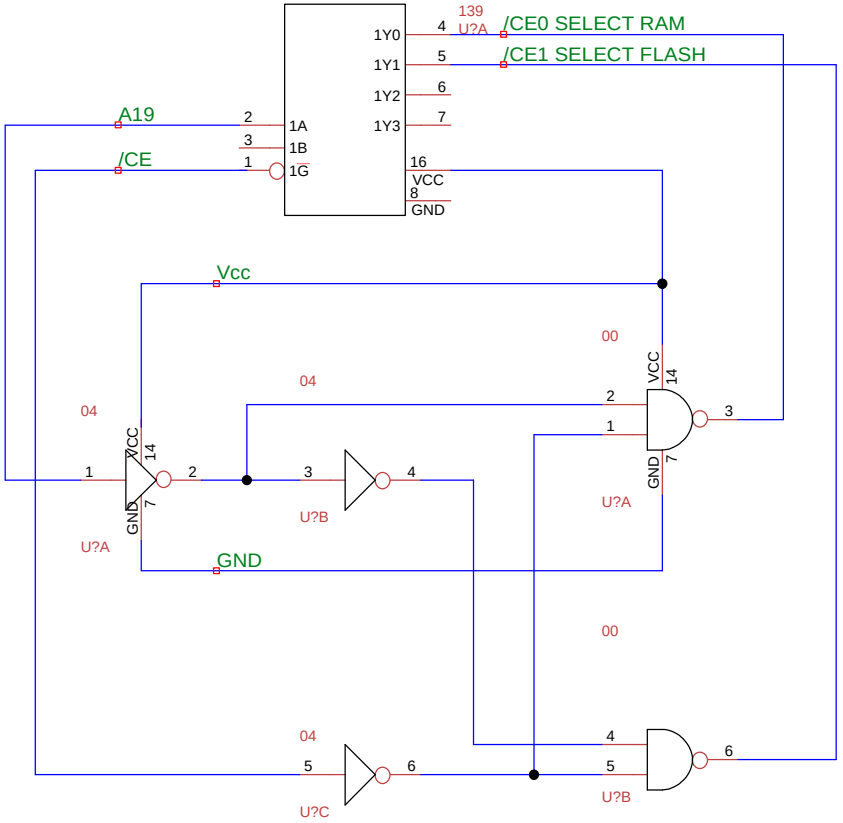

Spare Gates - Inputs to GND

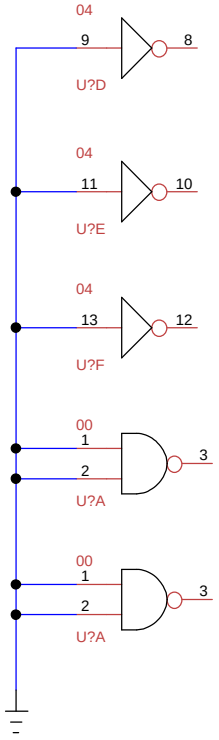

Title Turbo Decode		
Author Vic Gerhardi Rakewell Limited		
File II\Products\Z88\Circuits\20160824 Turbo Decoder		Document
Revision 1.0	Date 24/08/2016	Sheets 1 of 1