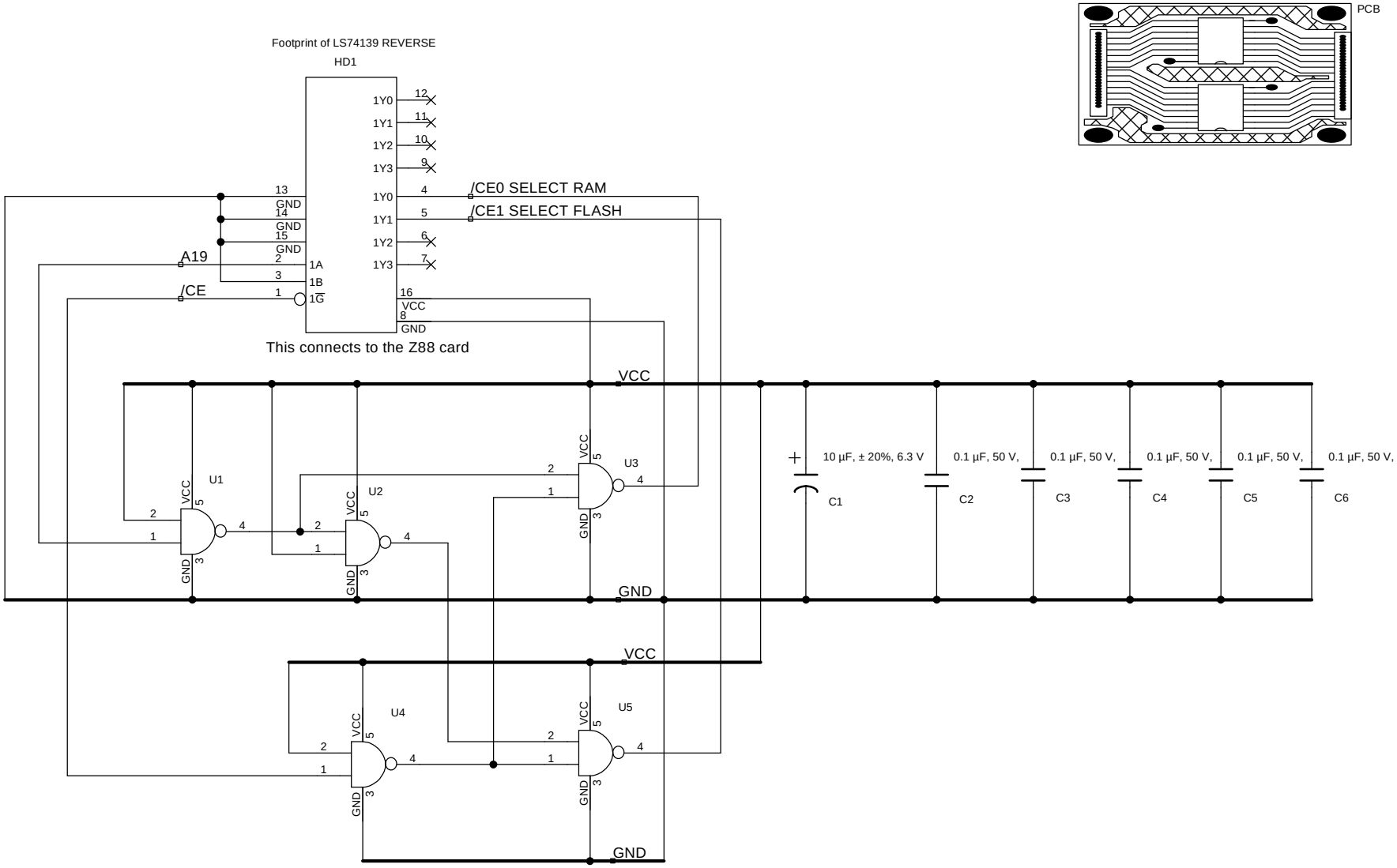

Title 74139 Z88 Turbo Decoder		
Author Vic Gerhardi Rakewell Limited		
File :ll\Products\Z88\Circuits\20160906 Turbo Decoder		Document
Revision 1.3	Date 06/09/2016	Sheets 1 of 1